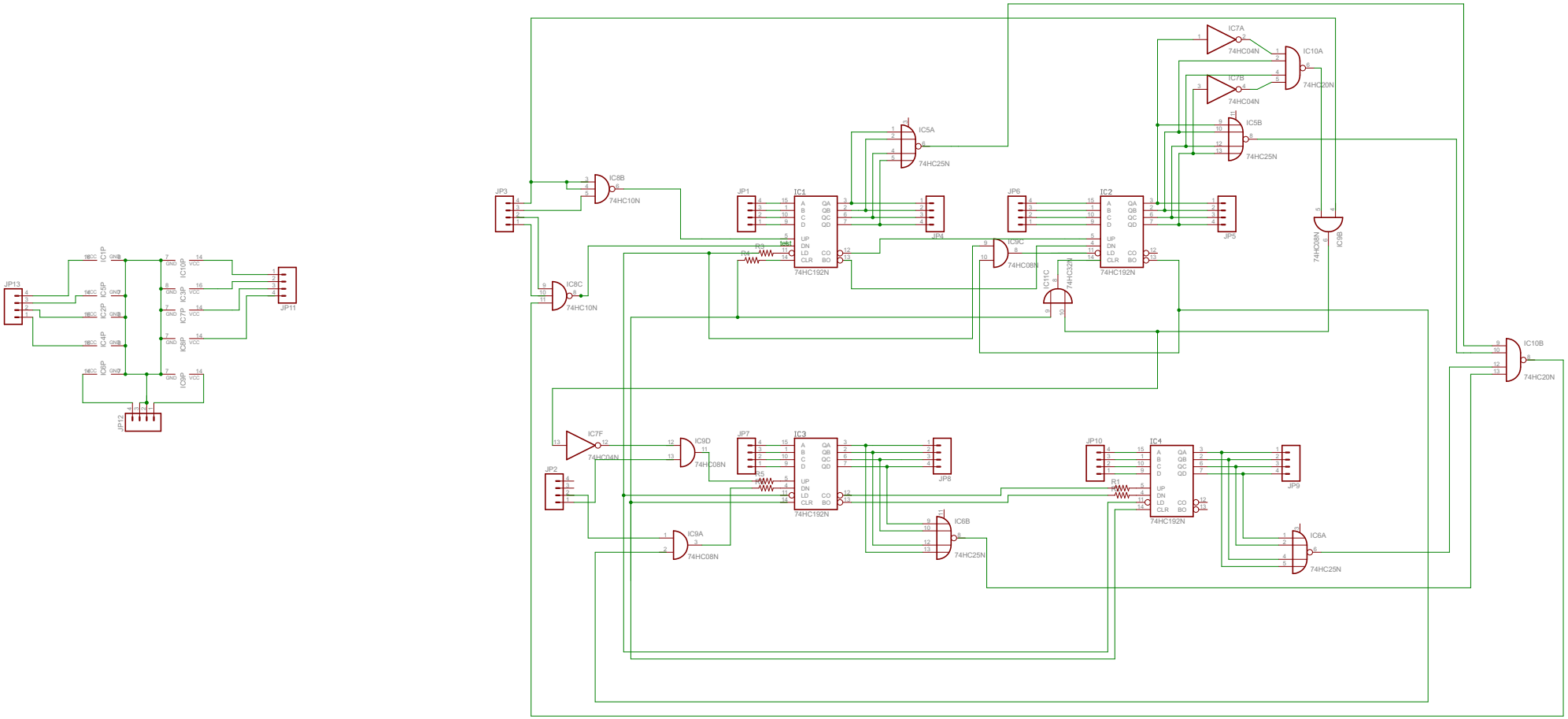

5/5/2012 5:03:16 PM f=0.47 F:\Traffic Light\Scoreboard Digits.sch (Sheet: 1/1)